PJM2310NSA
N-Channel Enhancement Mode Power MOSFET

Product Summary

- V_{DS}= 60V,I_D= 3A
- $R_{DS(on)}$< 100mΩ @V_{GS}= 10V
- $R_{DS(on)}$< 110mΩ @V_{GS}= 4.5V

SOT-23

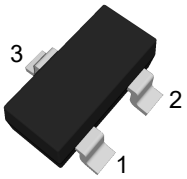

(Top View)

Pin	Description
1	Gate
2	Source
3	Drain

Features

- Advanced Trench Technology
- RoHS and Reach Compliant
- Halogen and Antimony Free
- Moisture Sensitivity Level 1
- Molding Compound Meets UL 94 V-0 Flammability Rating

Application

- Load Switch
- PWM Application
- Power Management

Schematic Diagram

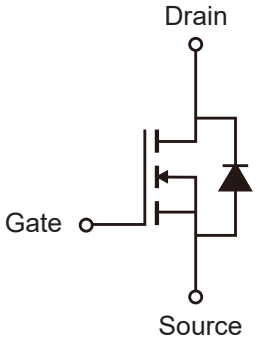

Marking Code

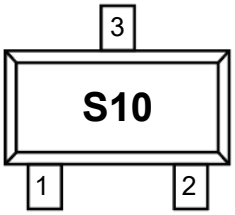

Absolute Maximum Ratings

Ratings at 25℃ ambient temperature unless otherwise specified.

Parameter		Symbol	Value	Unit
Drain-Source Voltage		V_{DS}	60	V
Gate-Source Voltage		V_{GS}	±20	V
Drain Current-Continuous	T_A=25℃	I_D	3	A
	T_A=100℃		2	
Drain Current-Pulsed [Note1]		I_{DM}	12	A
Maximum Power Dissipation		P_D	1.25	W
Junction and Storage Temperature Range		T_J,T_{STG}	-55 to +150	°C

Thermal Characteristics

Thermal Resistance,Junction-to-Ambient [Note2]	$R_{\theta JA}$	100	°C/W

Electrical Characteristics

(T_A=25℃ unless otherwise specified)

Parameter	Symbol	Test Condition	Min.	Typ.	Max.	Unit
Static Characteristics						
Drain-Source Breakdown Voltage	$V_{(BR)DSS}$	V_{GS}=0V,I_D=250μA	60	--	--	V
Zero Gate Voltage Drain Current	I_{DSS}	V_{DS}=60V,V_{GS}=0V	--	--	1	μA
Gate-Body Leakage Current	I_{GSS}	V_{GS}=±20V,V_{DS}=0V	--	--	±100	nA
Gate Threshold Voltage Note3	$V_{GS(th)}$	V_{DS}=V_{GS},I_D=250μA	1	1.5	2.5	V
Drain-Source On-Resistance Note3	$R_{DS(on)}$	V_{GS}=10V,I_D=3A	--	61	100	mΩ
		V_{GS}=4.5V,I_D=3A	--	77	110	mΩ
Forward Transconductance Note3	g_{FS}	V_{DS}=5V,I_D=2A	--	3.7	--	S
Dynamic Characteristics						
Input Capacitance	C_{iss}	V_{DS}=25V,V_{GS}=0V,f=1MHz	--	380	--	pF
Output Capacitance	C_{oss}		--	28	--	pF
Reverse Transfer Capacitance	C_{rss}		--	23	--	pF
Gate resistance	R_g	V_{GS}=0V,f=1MHz	--	1.4	--	Ω
Total Gate Charge	Q_g	V_{DS}=30V,I_D=3A, V_{GS}=10V	--	9	--	nC
Gate-Source Charge	Q_{gs}		--	1.5	--	nC
Gate-Drain Charge	Q_{gd}		--	2	--	nC
Switching Characteristics						
Turn-on Delay Time	$t_{d(on)}$	V_{DD}=30V, I_D=2A, V_{GS}=10V, R_{GEN}=3Ω	--	5	--	nS
Turn-on Rise Time	t_r		--	7	--	nS
Turn-off Delay Time	$t_{d(off)}$		--	37	--	nS
Turn-off Fall Time	t_f		--	22	--	nS
Source-Drain Diode Characteristics						
Diode Forward Voltage Note3	V_{SD}	V_{GS}=0V,I_S=2.4A	--	--	1.2	V
Diode Forward Current	I_S		--	--	3	A

Note:

1. Repetitive Rating: Pulse width limited by maximum junction temperature
2. Surface mounted on 1inch^2 FR-4 board with 2OZ copper
3. Pulse Test: Pulse width≤300μs, duty cycle≤0.5%

Typical Characteristic Curves

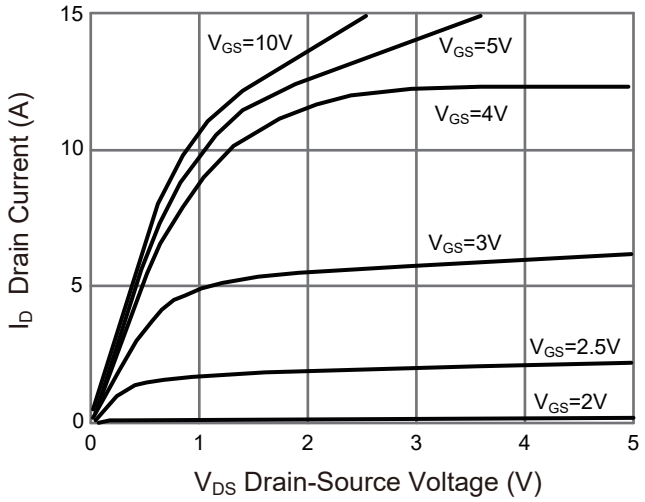

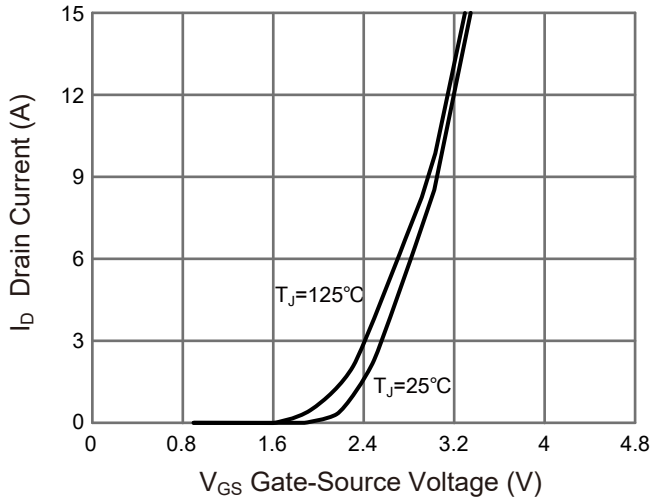

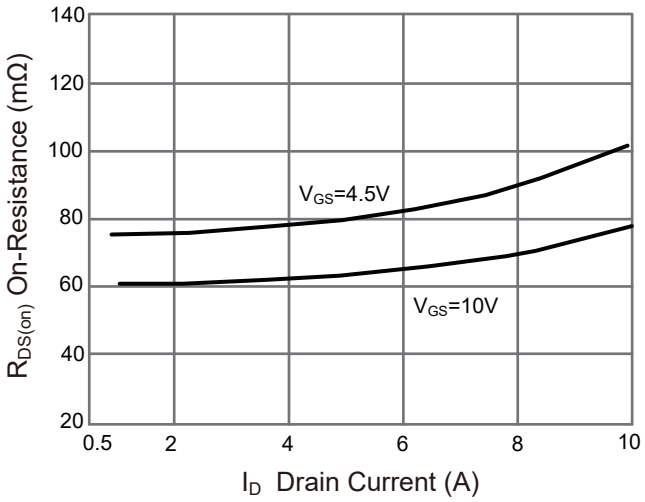

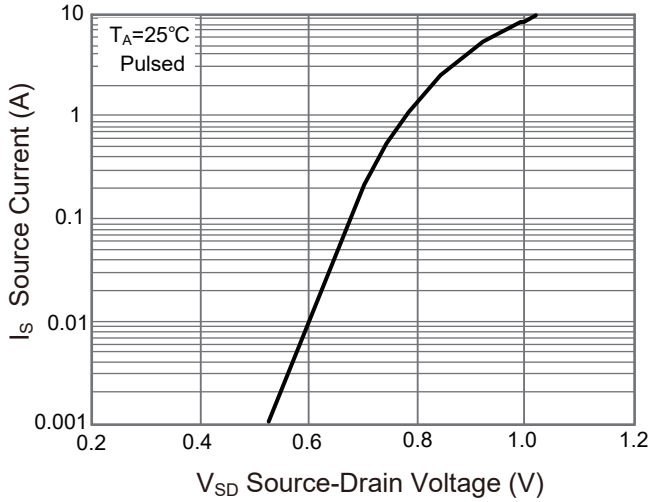

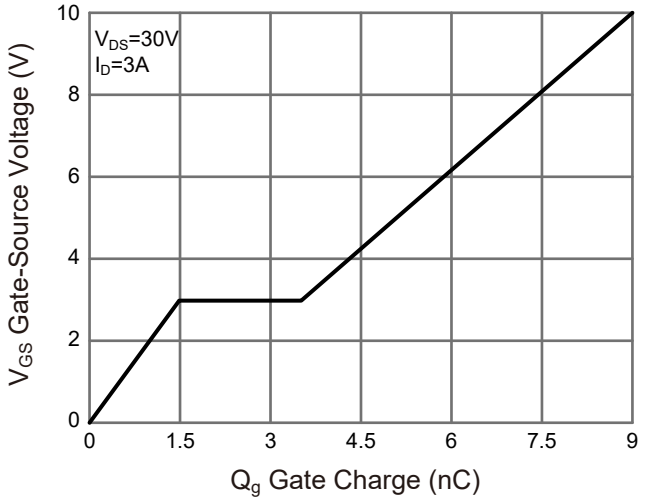

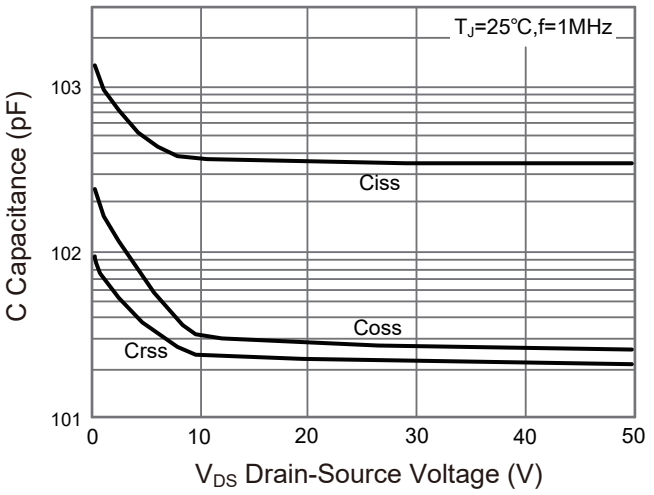

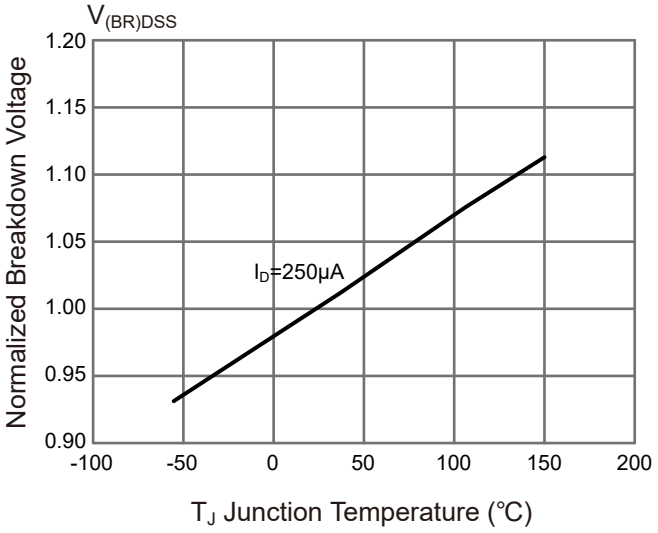
V(BR)DSS
Normalized Breakdown Voltage
1.20
1.15
1.10
1.05
1.00
0.95
0.90
-100
-50
0
50
100
150
200
ID=250μA
TJ Junction Temperature (℃)

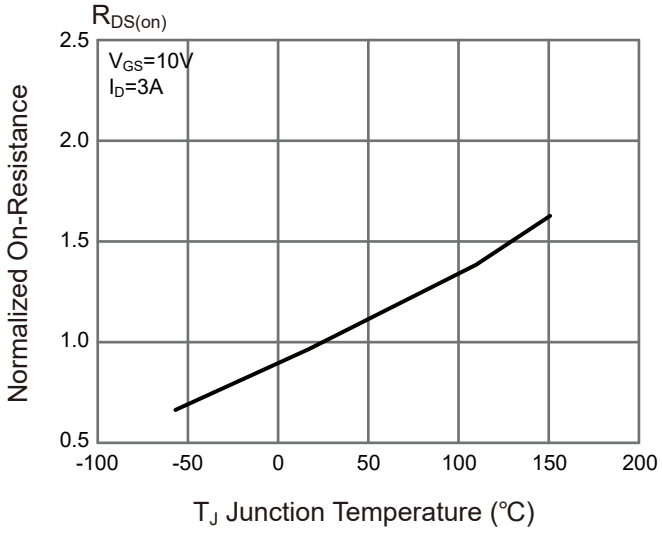
RDS(on)
Normalized On-Resistance
VGS=10V
ID=3A
2.5
2.0
1.5
1.0
0.5
-100
-50
0
50
100
150
200
TJ Junction Temperature (℃)

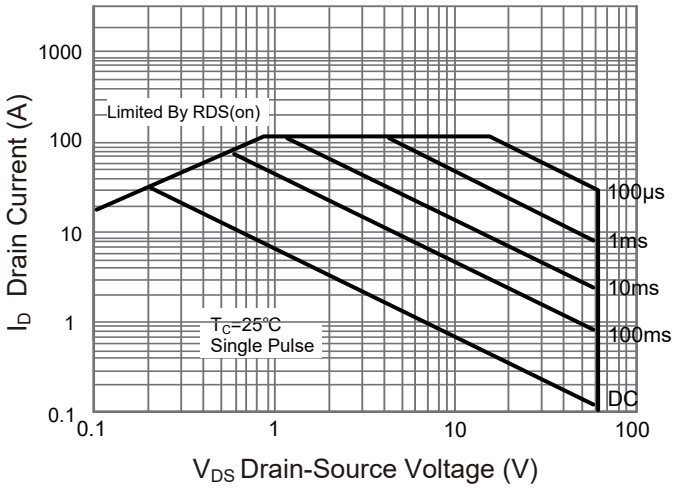
ID Drain Current (A)
1000
100
10
1
0.1
Limited By RDS(on)
100μs
1ms
10ms
100ms
DC
TC=25℃
Single Pulse
0.1
1
10
100
VDS Drain-Source Voltage (V)

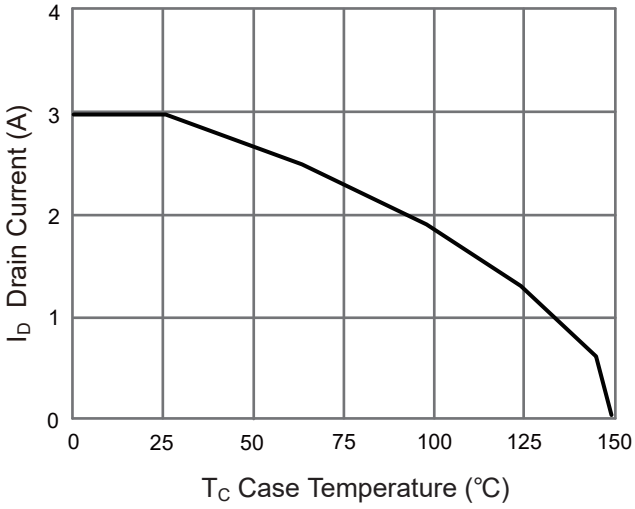
ID Drain Current (A)
4
3
2
1
0
0
25
50
75
100
125
150
TC Case Temperature (℃)

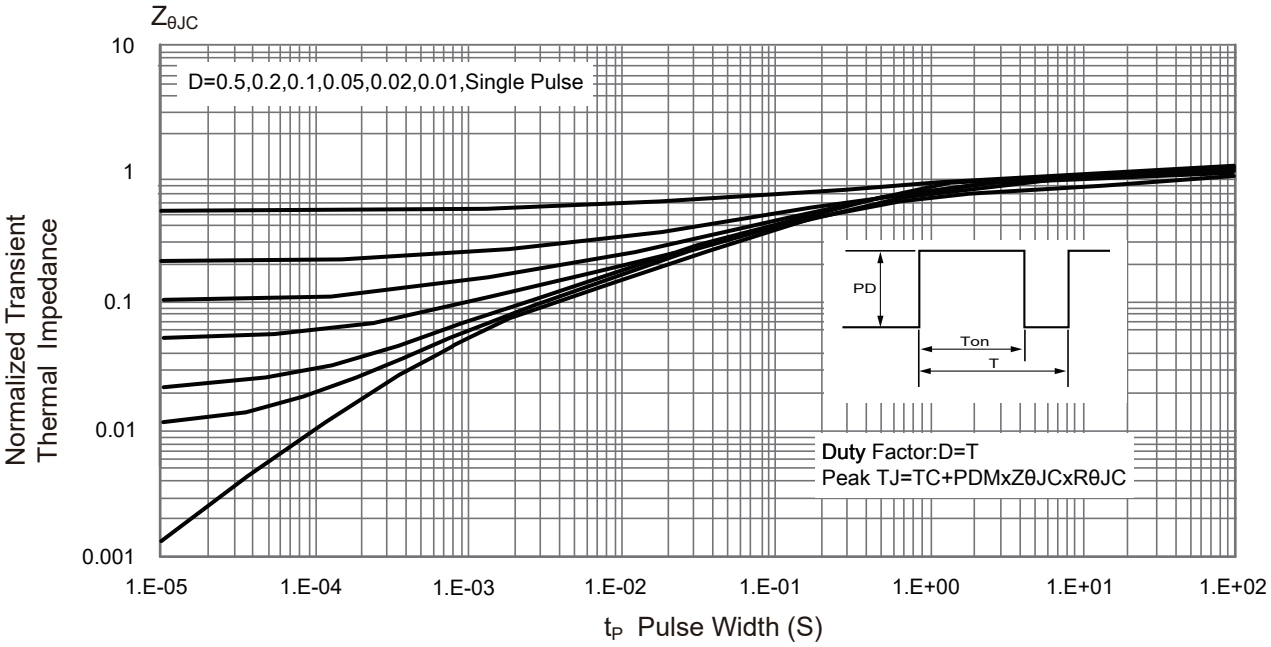
ZθJC
Normalized Transient Thermal Impedance
10
1
0.1
0.01
0.001
D=0.5,0.2,0.1,0.05,0.02,0.01,Single Pulse
PD
Ton
T
Duty Factor:D=T
Peak TJ=TC+PDMxZθJCxRθJC
1.E-05
1.E-04
1.E-03
1.E-02
1.E-01
1.E+00
1.E+01
1.E+02
tP Pulse Width (S)

Test Circuit

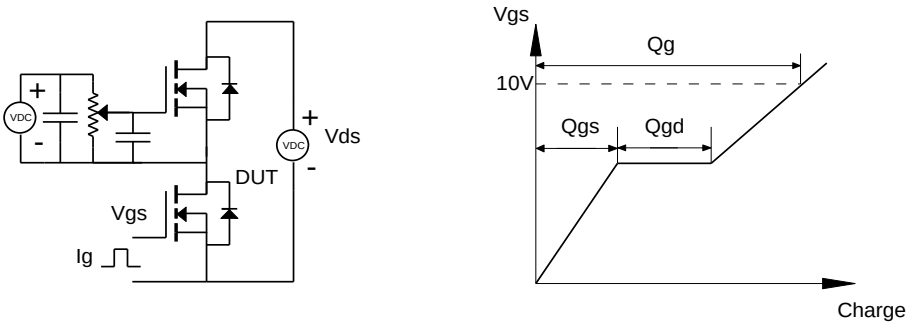

Figure 1: Gate Charge Test Circuit & Waveform

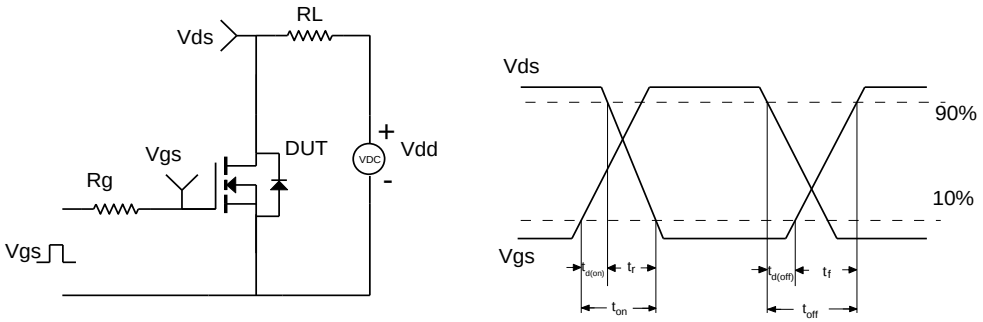

Figure 2: Resistive Switching Test Circuit & Waveform

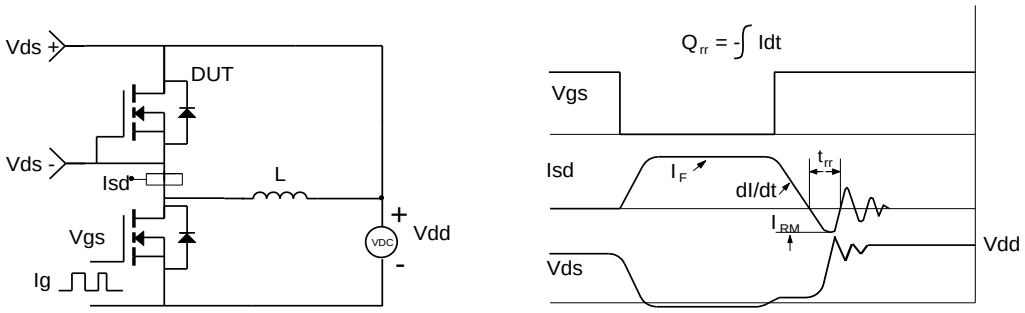

Figure 3: Diode Recovery Test Circuit & Waveform

Package Outline

SOT-23

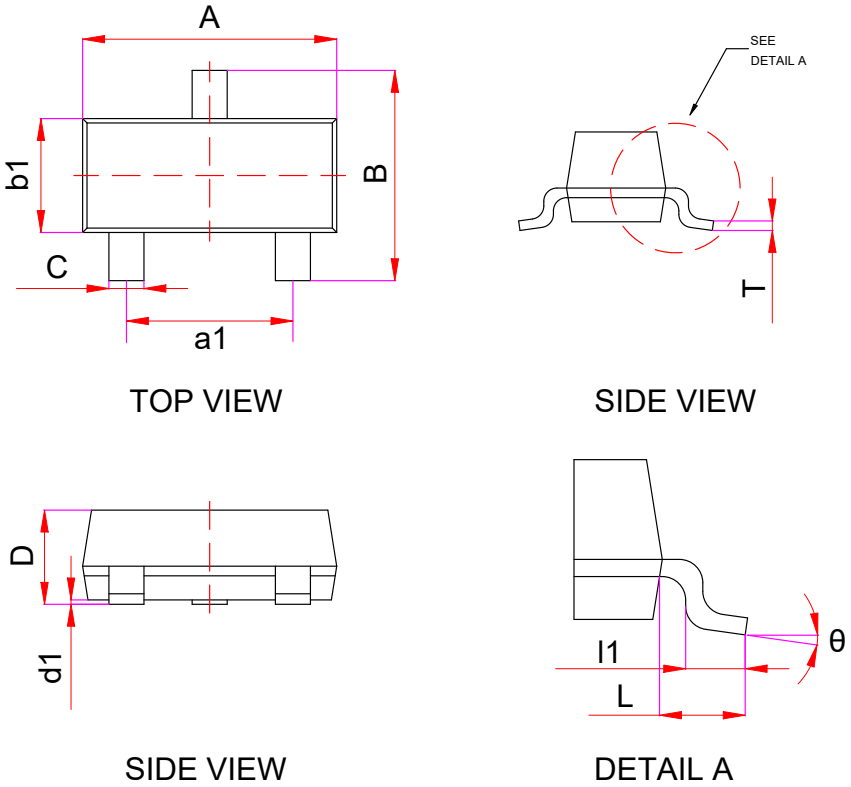

Symbol	Dimensions in Millimeters			Dimensions in Inches		
	Min.	Nom.	Max.	Min.	Nom.	Max.
A	2.800	2.900	3.000	0.110	0.114	0.118
B	2.250	2.400	2.550	0.089	0.094	0.100
a1	1.800	1.900	2.000	0.071	0.075	0.079
b1	1.200	1.300	1.400	0.047	0.051	0.055
C	0.300	0.400	0.500	0.012	0.016	0.020
D	0.900	1.025	1.150	0.035	0.040	0.045
d1	0.000	0.050	0.100	0.000	0.002	0.004
L	0.550 REF			0.022 REF		
I1	0.300	-	0.500	0.012	-	0.020
T	0.080	0.115	0.150	0.003	0.005	0.006
θ	0°	-	8°	0°	-	8°

Suggested Pad Layout

SOT-23

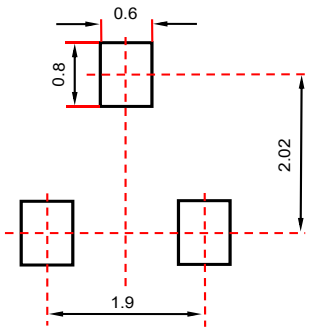

Note:

1. Package Body Sizes Exclude Mold Flash and Gate Burrs
2. Controlling Dimension: In millimeters
3. General Tolerance:±0.05mm
4. The Pad Layout is for reference purposes only

Conditions of Soldering and Storage

◆ **Recommended condition of Reflow Soldering(Pb-Free Solder)**

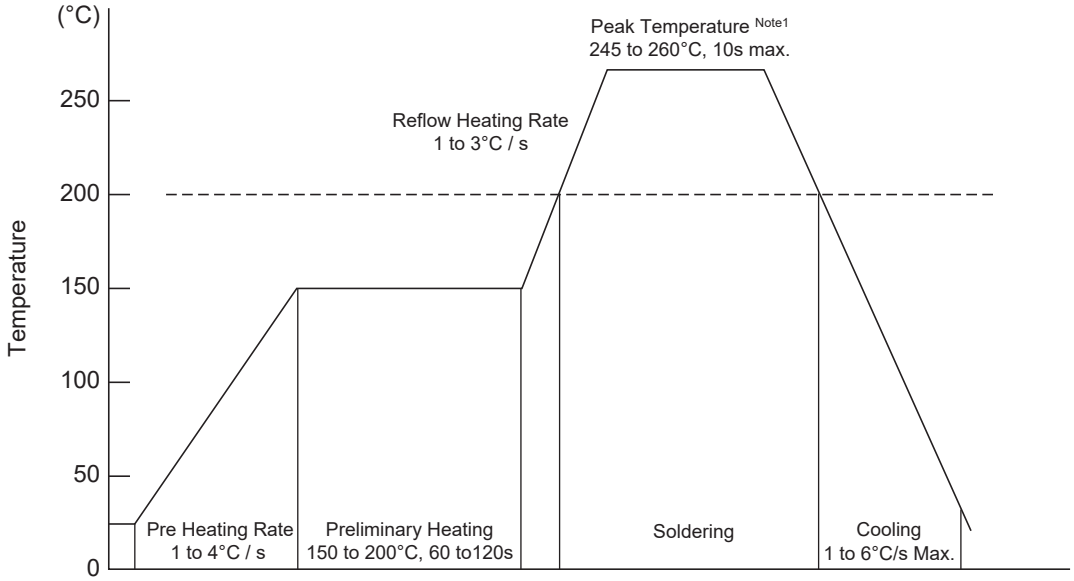

Recommended peak temperature is over 245°C. If peak temperature is below 245°C, you may adjust the following parameters:

- Time length of peak temperature (longer)
- Time length of soldering (longer)
- Thickness of solder paste (thicker)

Note1：

Maximum thermal excursion allowed during the reflow assembly is as follow：

- Temperature：255°C~260°C
- Duration at peak soak：30 seconds
- Number of reflow: 3

- **Conditions of hand soldering** Note2

- Temperature: 320±10°C
- Time: 3s max.
- Times: one time

Note2：Not recommended for mass production, an engineering project, or re-work, it is allowed. It should be used with caution

- **Storage conditions**

- **Temperature**

5 to 30°C

- **Humidity**

≤ 60% RH

- **Floor Life**

No Limited

- **Recommended period**

Five year after manufacturing(Depends on storage conditions)

Package Specifications

- The method of packaging

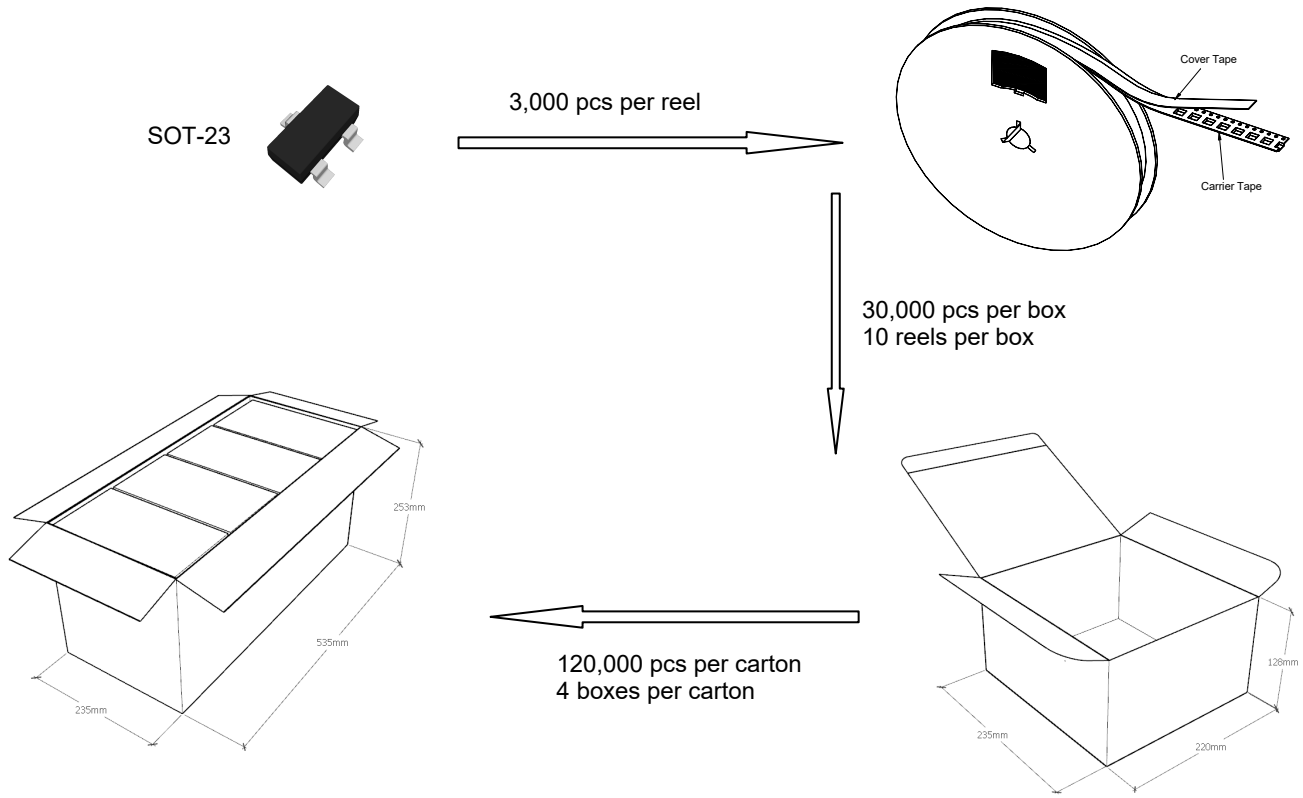

◆ Embossed tape and reel data

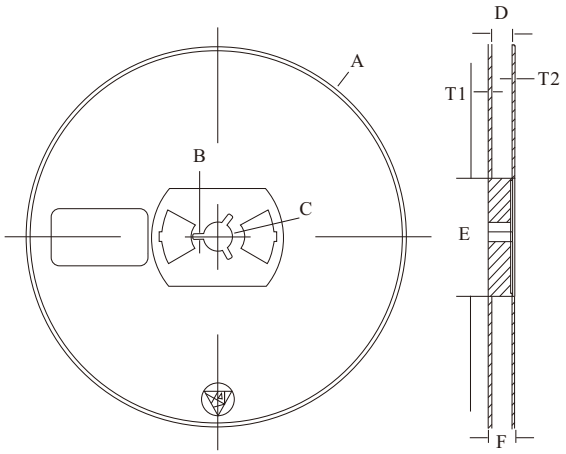

Symbol	Value (unit: mm)
A	Ø 177.8±1
B	2.7±0.2
C	Ø 13.5±0.2
E	Ø 54.5±0.2
F	12.3±0.3
D	9.6+2/-0.3
T1	1.0±0.2
T2	1.2±0.2
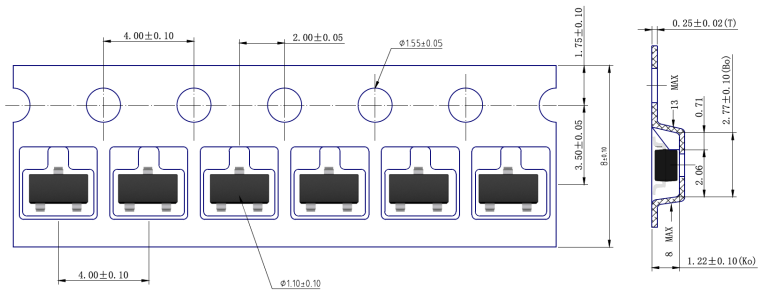
Reel (7")